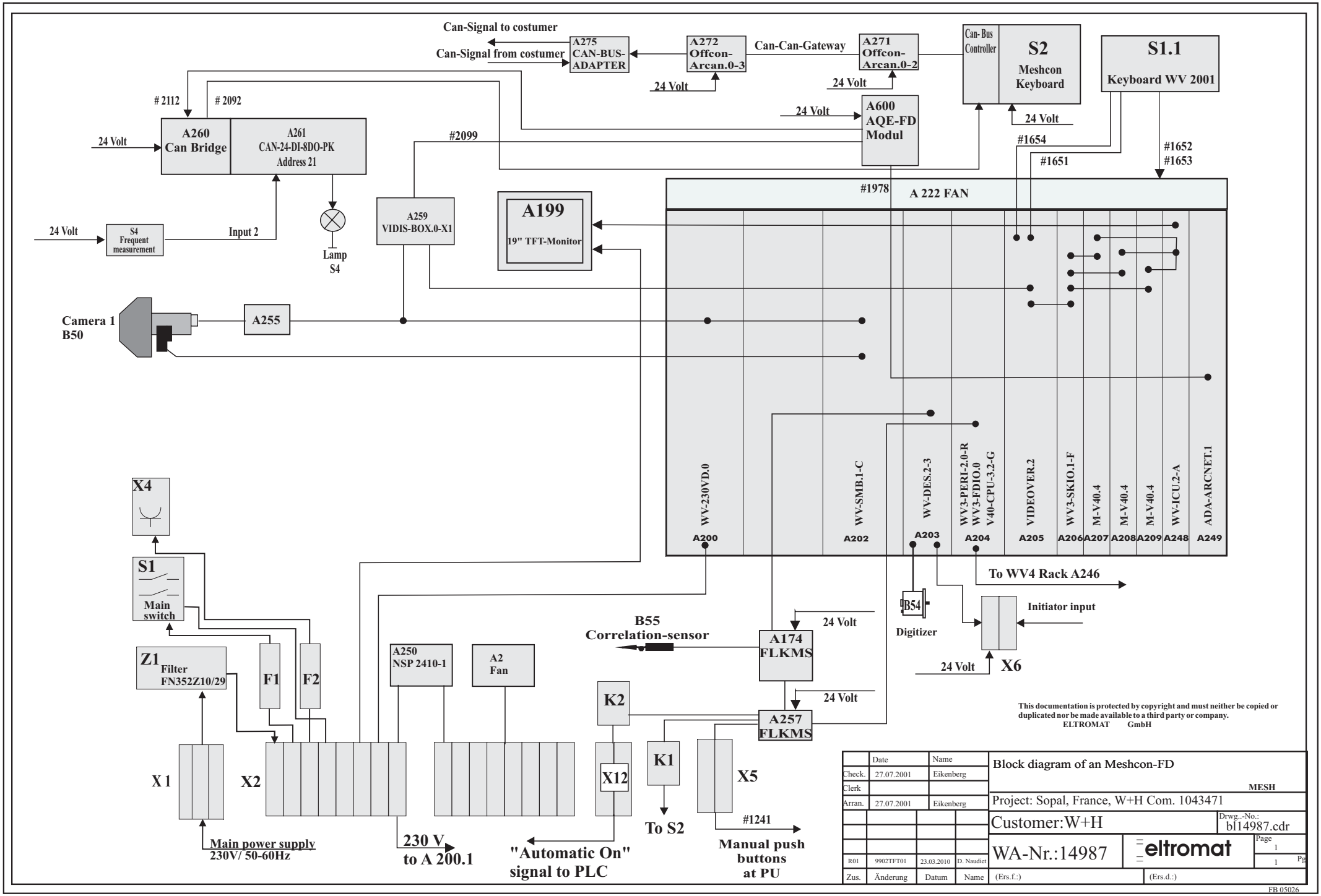

This documentation is protected by copyright and must neither be copied or duplicated nor be made available to a third party or company.
ELTROMAT GmbH

	Date	Name	
Check.	27.07.2001	Eikenberg	
Clerk			
Arran.	27.07.2001	Eikenberg	
R01	9902TFT01	23.03.2010	D. Naudiet
Zus.	Änderung	Datum	Name

Block diagram of an Meshcon-FD

MESH

Project: Sopal, France, W+H Com. 1043471

Customer:W+H

Drwg.-No.: bl14987.cdr

WA-Nr.:14987

eltromat

Page 1 / Pg 1

(Ers.f.:) (Ers.d.:)

FB 05026

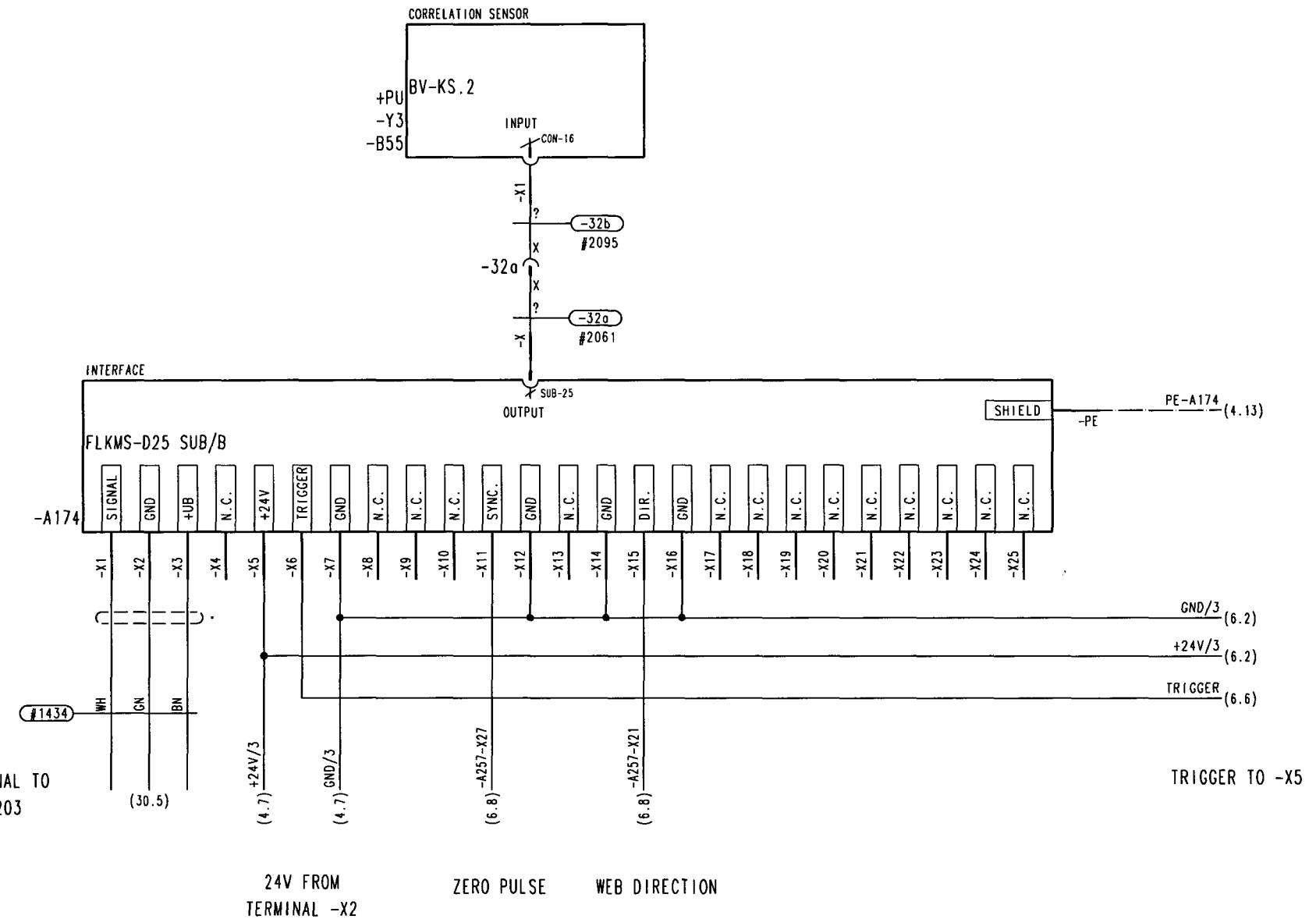

				arranged	BEI	TROMAT GmbH	This document is protected by copyright and must neither be copied or duplicated nor be made available to a third party or company. Any person violating the copyright will be held liable for damages.	project	contents	drawing type	=14987		
				design	MWA			WA 14987	MESHCON FD	WD	+C1		
				date	01.08.2001			W&H, SOPAL	CORRELATION SENSOR		drawing number	sheet: 5	
version	remark	date	drw	checked	BEI	Herforder Str. 249 - 251 33818 Leopoldshöhe Germany					SP 2182 E	of: 39	

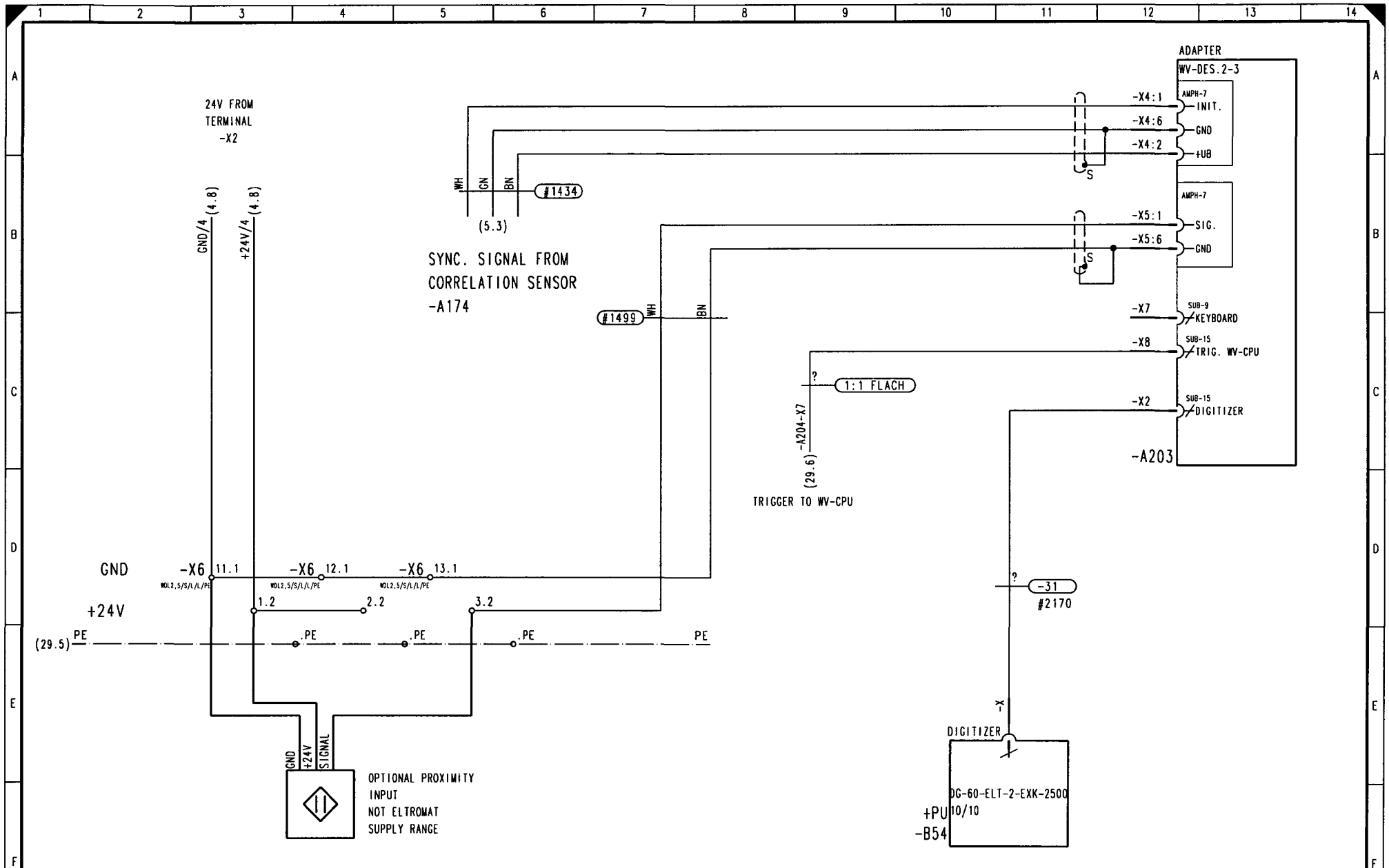

version	remark	date	drw		
				arranged	BEI
				design	MWA
				date	01.08.2001
				checked	BEI

ELTROMAT GmbH
Herforder Str. 249 - 251
33818 Leopoldshöhe Germany

This document is protected by copyright and must neither be copied or duplicated nor be made available to a third party or company. Any person violating the copyright will be held liable for damages.

project	WA 14987 W&H, SOPAL
contents	MESHCON FD,RACK 2 TRIGGER/DIGITIZER
drawing type	WD
	=14987 +C1
drawing number	SP 2182 E
sheet:	30
of:	39